부품 리스트		
항목	수량	부품 번호
1	1	Body_under_v11
2	1	Motor M v4
3	1	Gear v5
4	1	Lego v1

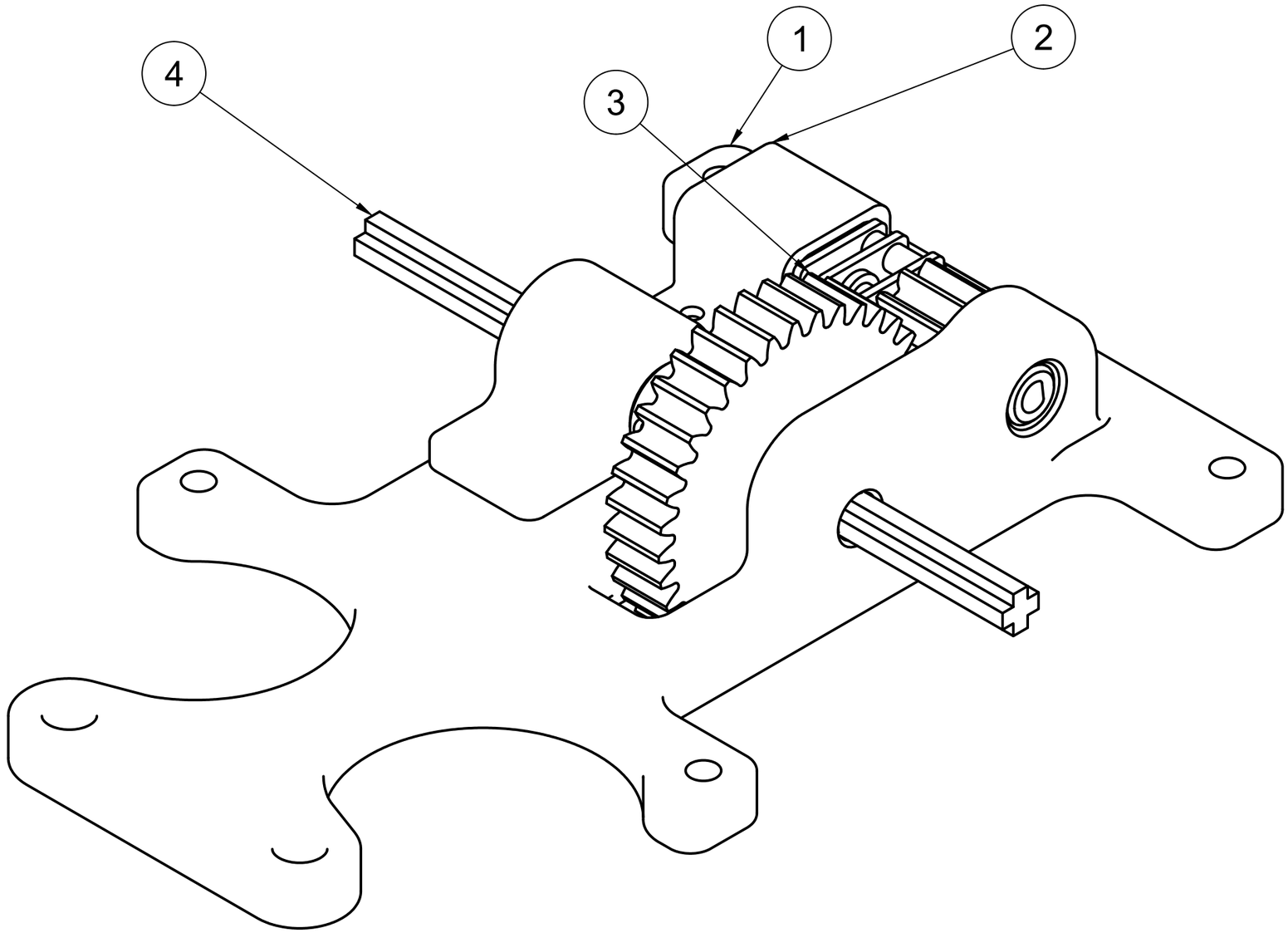

Dept.	Technical reference	Created by harrison lee 2026-04-08	Approved by
		Document type	Document status
		Title IROC_AI_CAR_2026	DWG No.
			Rev. / Date of issue / Sheet 1/8

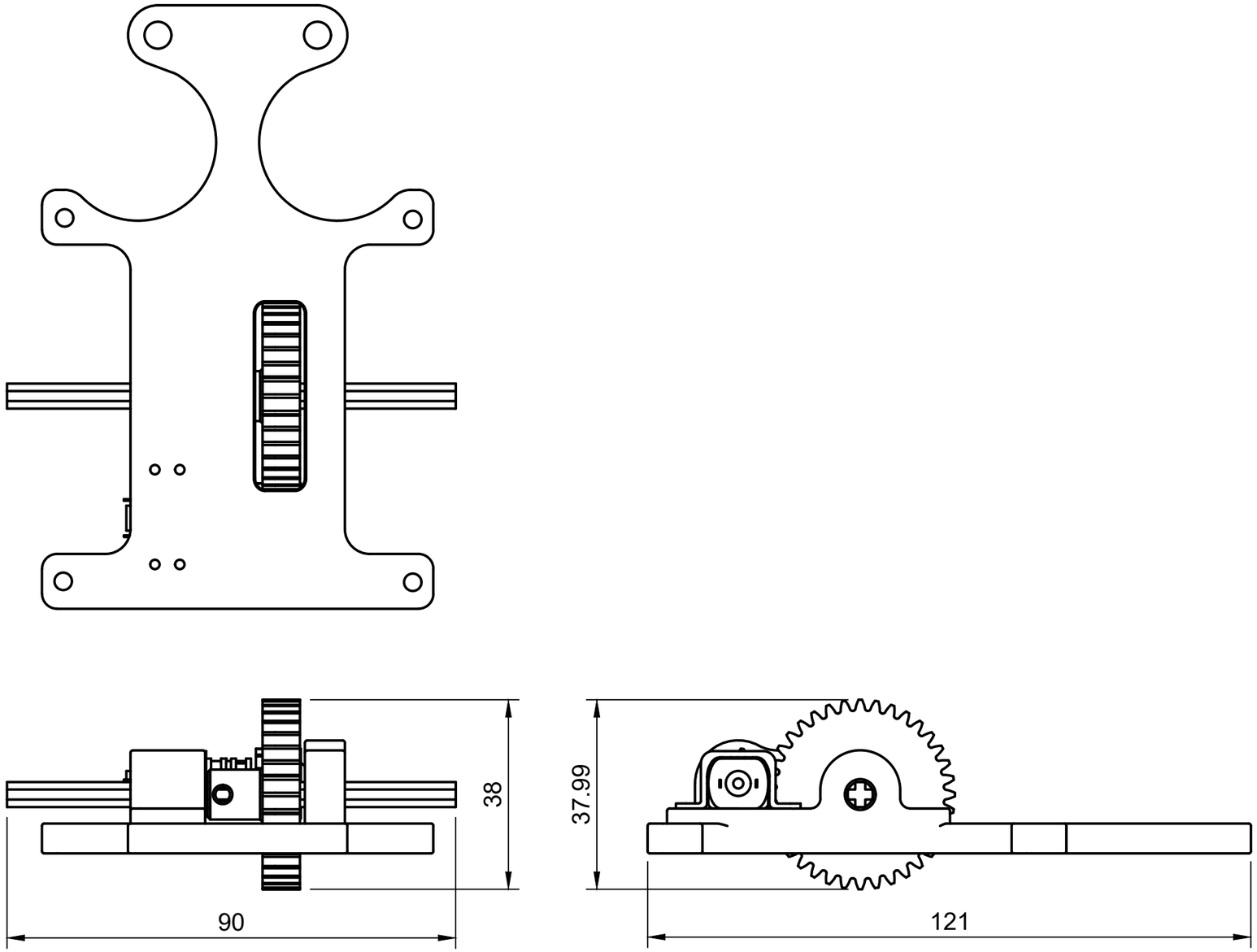

Dept.	Technical reference	Created by harrison lee 2026-04-08	Approved by
		Document type	Document status
		Title IROC_AI_CAR_2026	DWG No.
			Rev. / Date of issue / Sheet 2/8

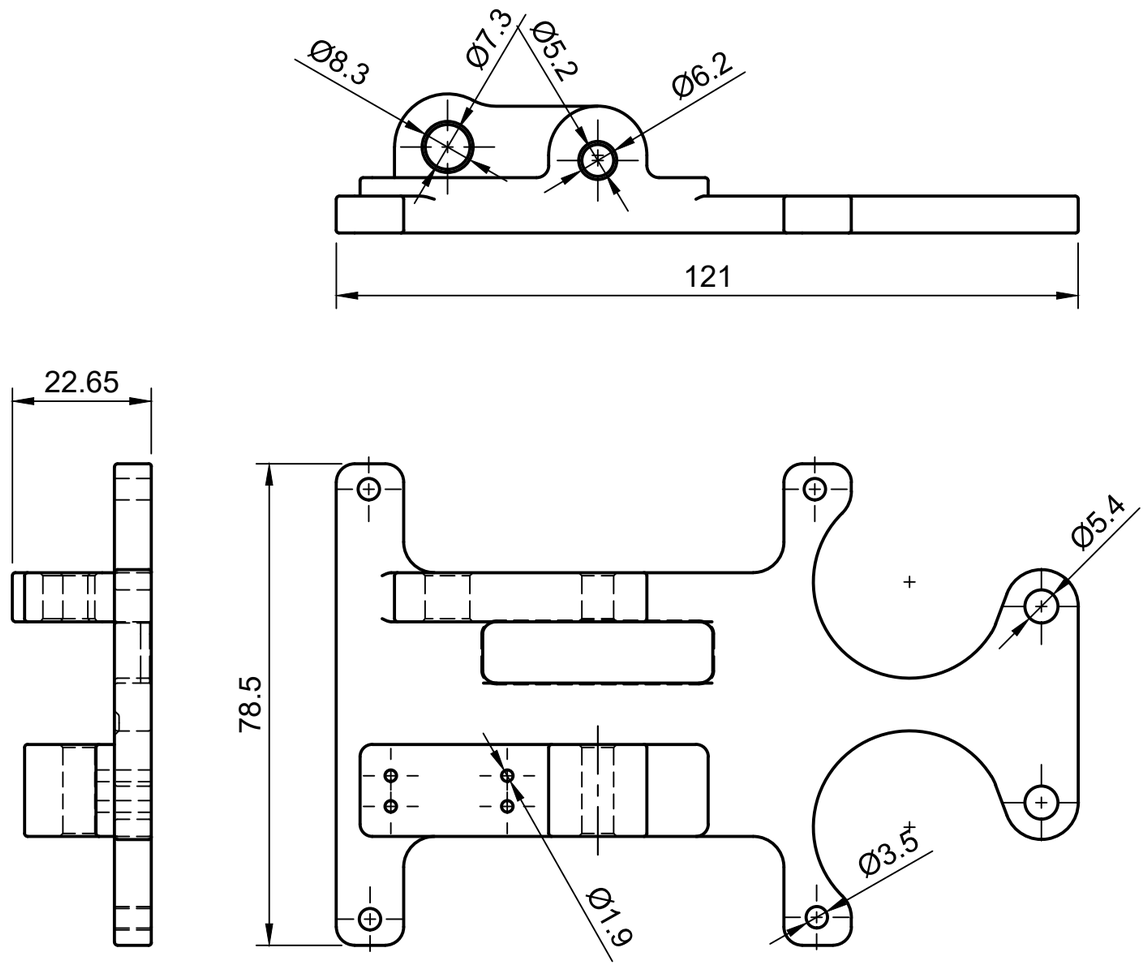

Dept.	Technical reference	Created by harrison lee 2026-04-08	Approved by
		Document type	Document status
		Title IROC_AI_CAR_2026	DWG No.
			Rev. / Date of issue / Sheet 3/8

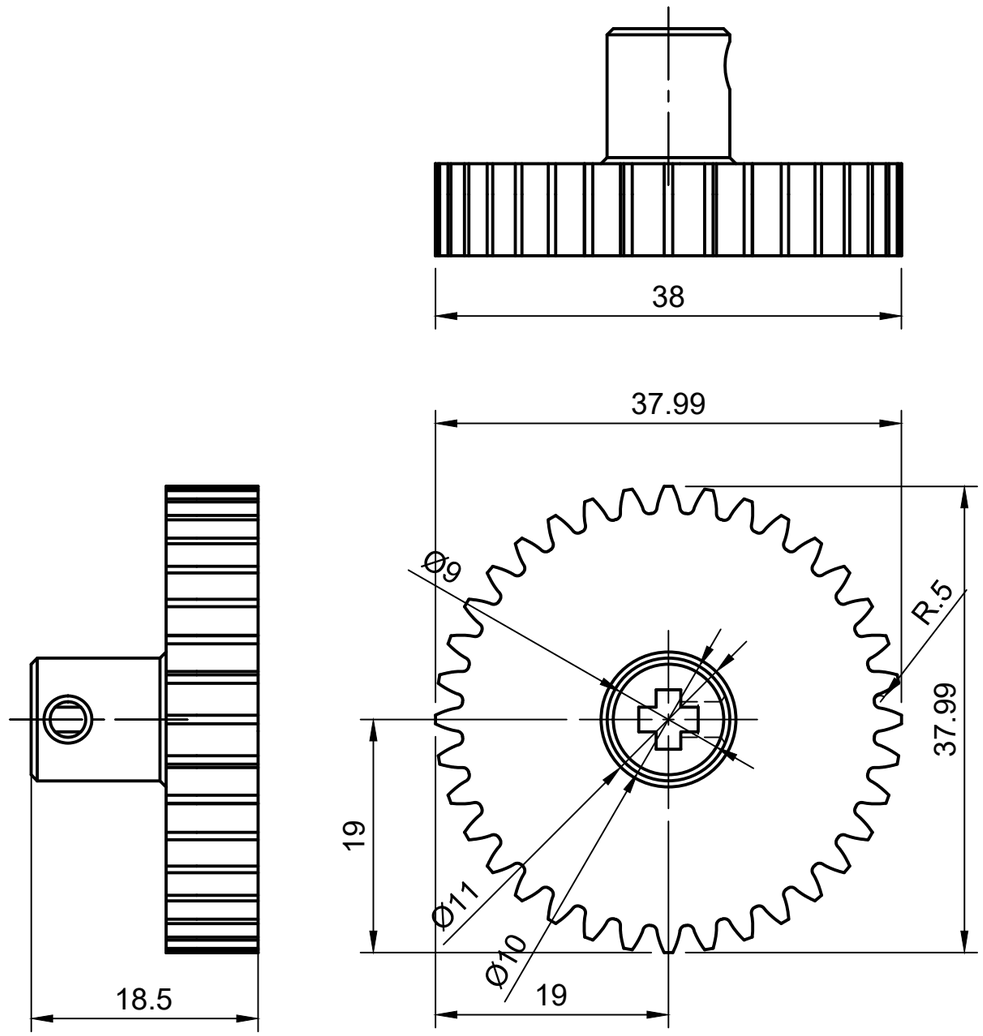

Dept.	Technical reference	Created by harrison lee 2026-04-08	Approved by
		Document type	Document status
		Title IROC_AI_CAR_2026	DWG No.
			Rev. / Date of issue / Sheet 4/8

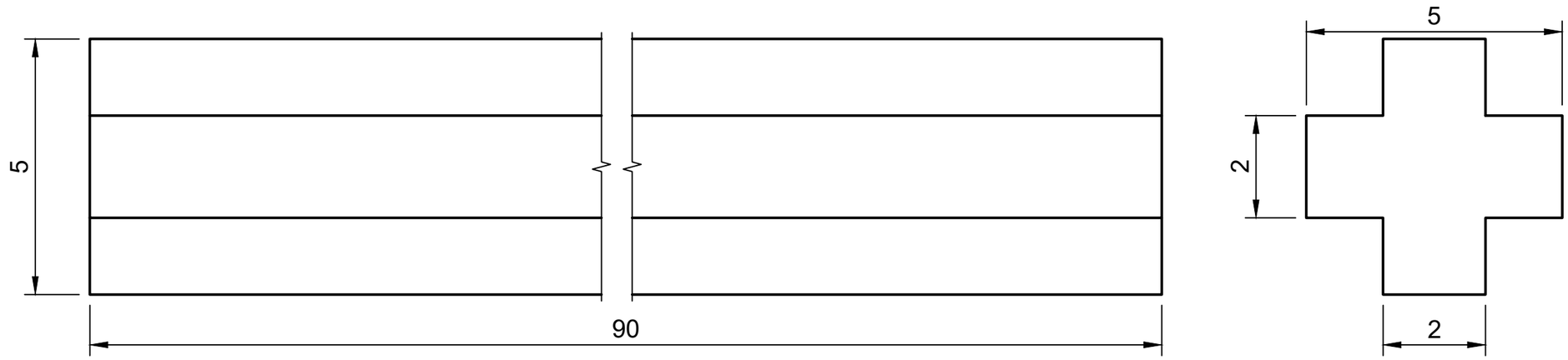

Dept.	Technical reference	Created by harrison lee 2026-04-08	Approved by
		Document type	Document status
		Title IROC_AI_CAR_2026	DWG No.
			Rev. / Date of issue / Sheet 5/8

부품 리스트		
항목	수량	부품 번호
1	1	Motor gear

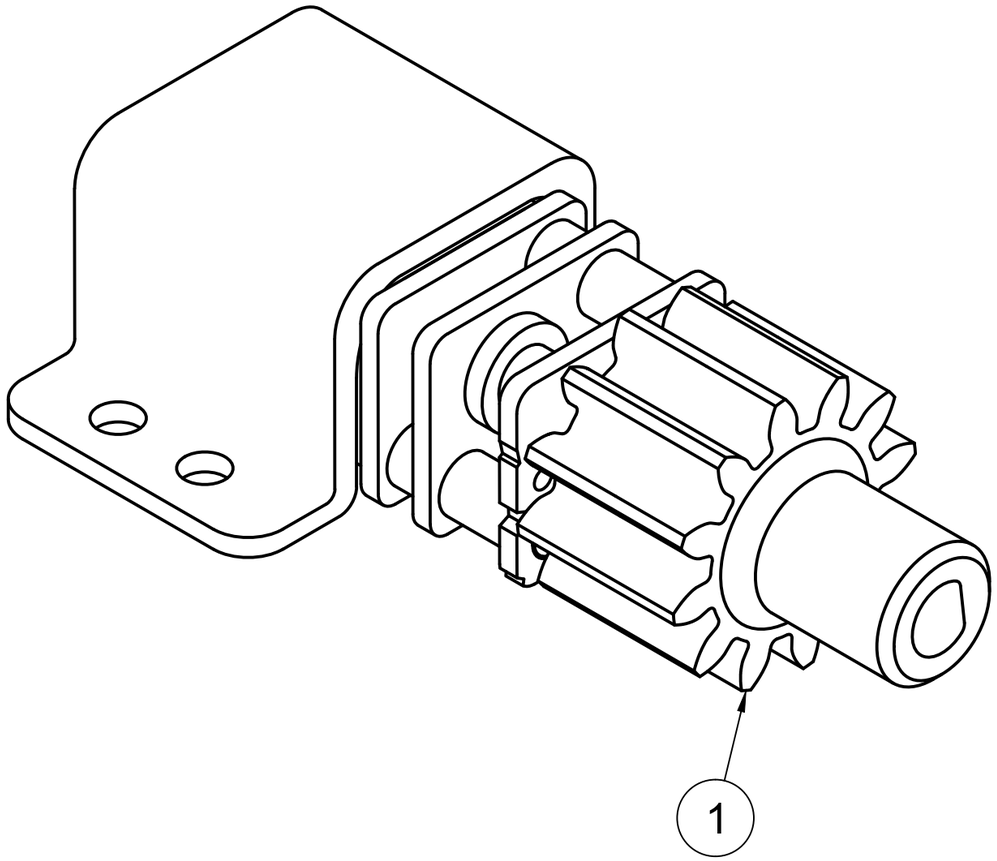

Dept.	Technical reference	Created by harrison lee 2026-04-08	Approved by
		Document type	Document status
		Title IROC_AI_CAR_2026	DWG No.
			Rev. / Date of issue / Sheet 6/8

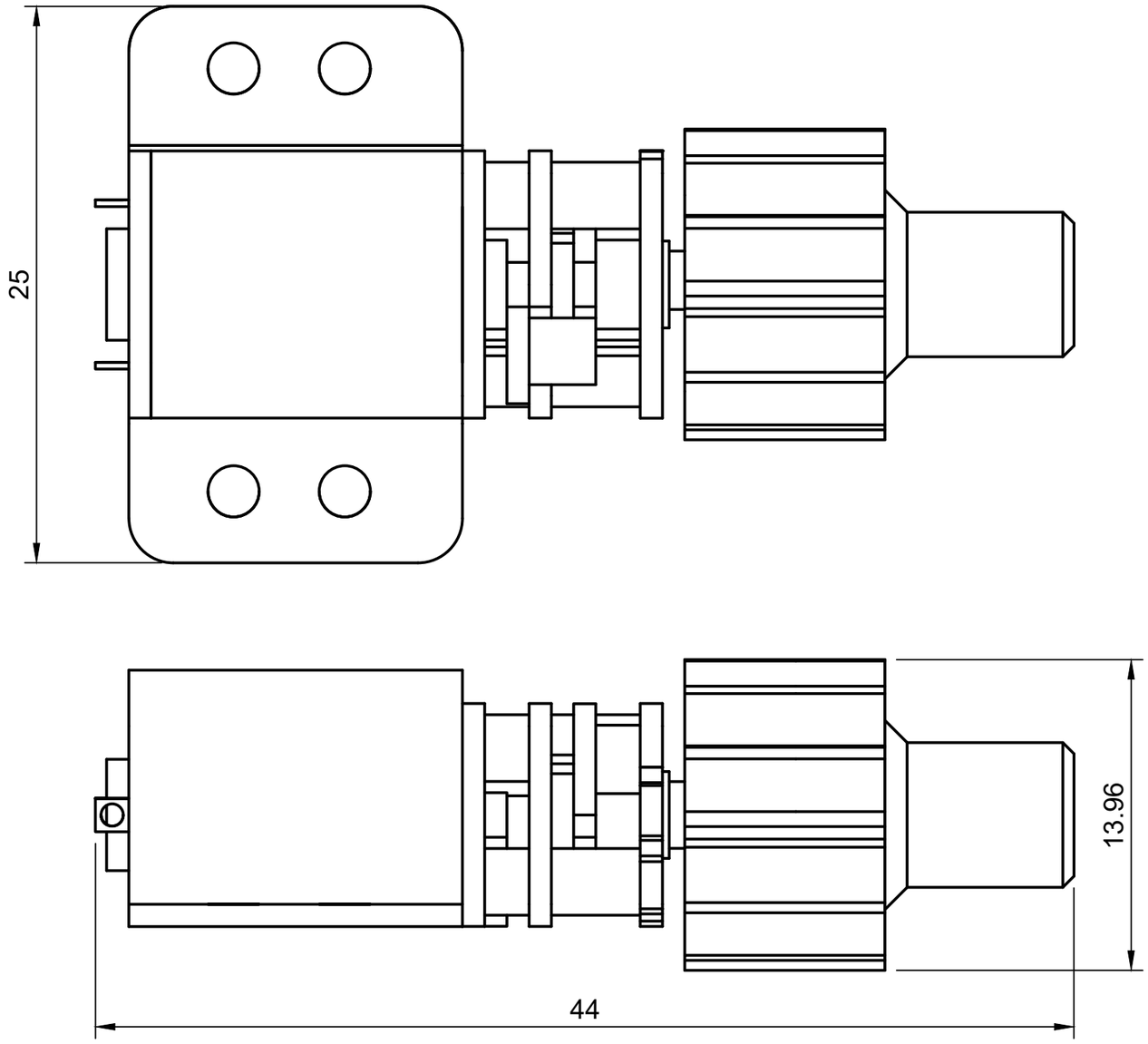

Dept.	Technical reference	Created by harrison lee 2026-04-08	Approved by
		Document type	Document status
		Title IROC_AI_CAR_2026	DWG No.
			Rev. / Date of issue / Sheet 7/8

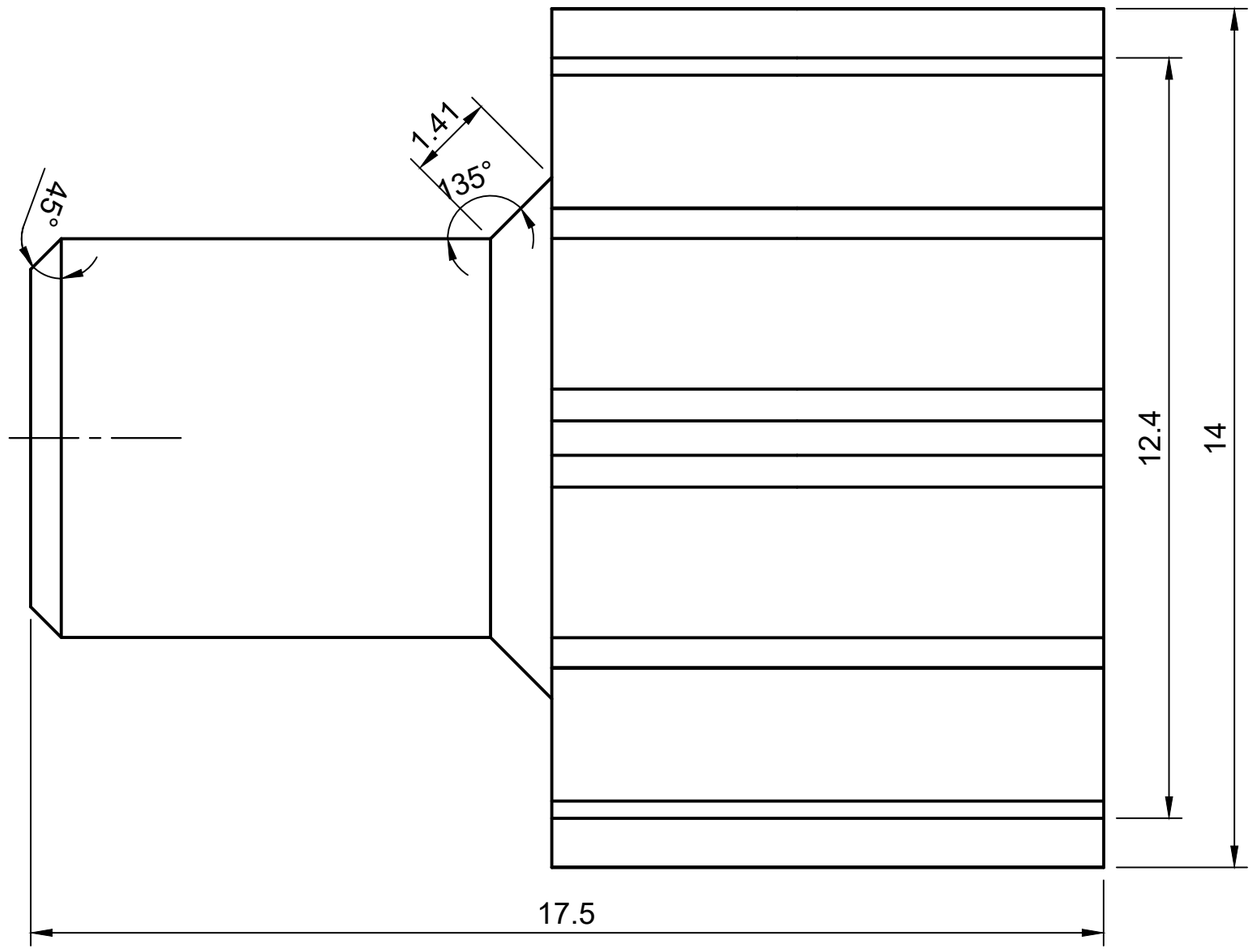

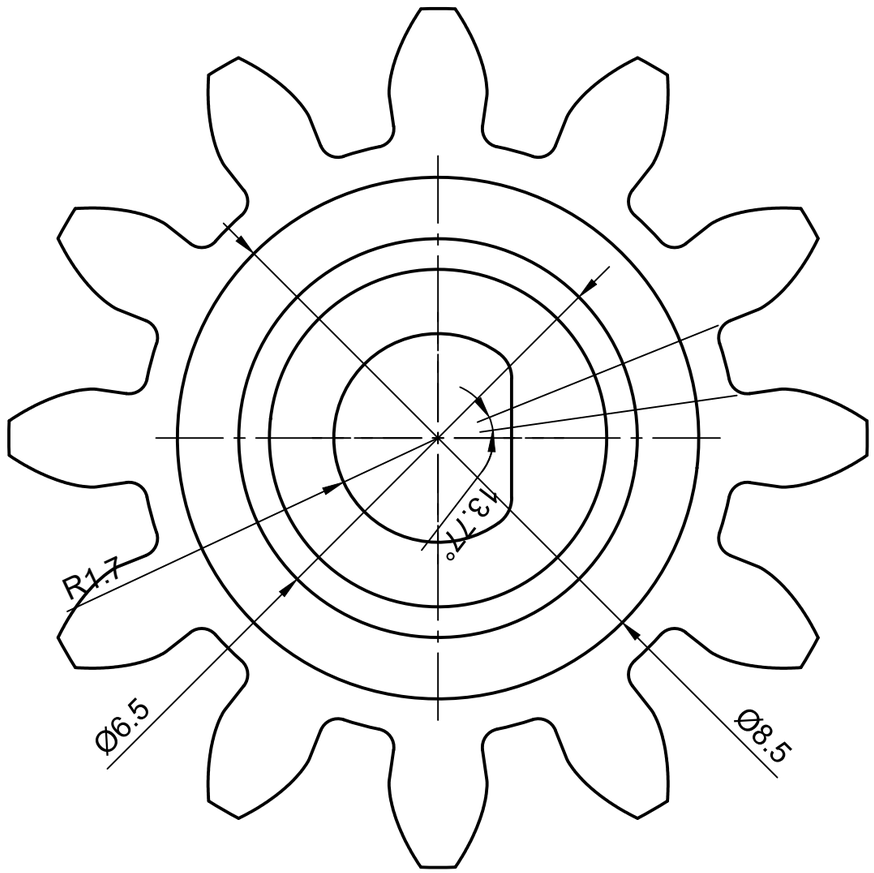

Dept.	Technical reference	Created by harrison lee 2026-04-08	Approved by
		Document type	Document status
		Title IROC_AI_CAR_2026	DWG No.
			Rev. / Date of issue / Sheet 8/8